UNIVERSITY OF CAMBRIDGE INTERNATIONAL EXAMINATIONS
International General Certificate of Secondary Education

CANDIDATE NAME	

CENTRE NUMBER						CANDIDATE NUMBER					

PHYSICS **0625/02**

Paper 2 Core **May/June 2007**

1 hour 15 minutes

Candidates answer on the Question Paper.

No Additional Materials are required.

READ THESE INSTRUCTIONS FIRST

Write your Centre number, candidate number and name on all the work you hand in.
Write in dark blue or black pen.
You may use a soft pencil for any diagrams, graphs or rough working.
Do not use staples, paper clips, highlighters, glue or correction fluid.
DO **NOT** WRITE IN ANY BARCODES.

Answer **all** questions.
You may lose marks if you do not show your working or if you do not use appropriate units.
Take the weight of 1 kg to be 10 N (i.e. acceleration of free fall = 10 m/s^2).

At the end of the examination, fasten all your work securely together.
The number of marks is given in brackets [ ] at the end of each question or part question.

For Examiner's Use	
1	
2	
3	
4	
5	
6	
7	
8	
9	
10	
11	
12	
Total	

This document consists of **19** printed pages and **1** blank page.

SPA (MML 13116 3/06) T25803/4
© UCLES 2007

UNIVERSITY of CAMBRIDGE International Examinations

[Turn over

www.root19.com +91 - 9969 353 391

For Examiner's Use

1 The mechanical stop-clock shown in Fig. 1.1 has

a seconds hand, which rotates once every minute
and a minutes hand, which rotates once every hour.

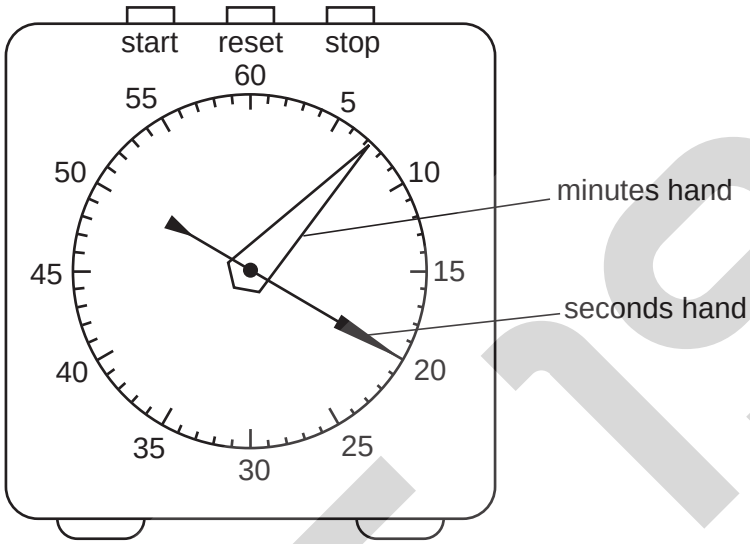

Fig. 1.1

(a) A student uses the clock to time the intervals between trains travelling along the railway past his school.

He sets the clock to zero (both hands vertical).

As train 1 passes, he starts the clock and leaves it running.

After 35 s, train 2 passes.

On the blank face of Fig. 1.2, show the positions of the two hands of the clock as train 2 passes. Make sure it is clear which hand is which. [2]

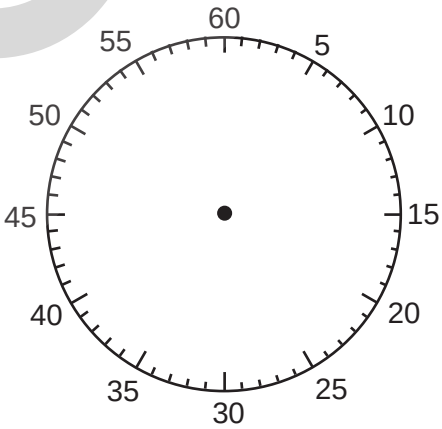

Fig. 1.2

For Examiner's Use

(b) Train 3 passes the school 4 minutes and 55 s after the clock was started.

On the blank face of Fig. 1.3, show the positions of the hands of the clock as train 3 passes. [2]

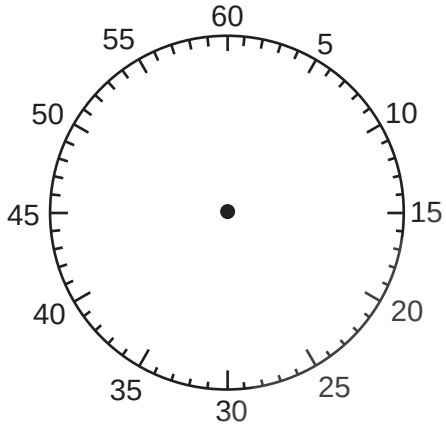

Fig. 1.3

(c) Calculate the time interval between train 2 and train 3.

time interval = ... min ..... s [1]

[Total: 5]

www.root19.com +91 - 9566355391

For Examiner's Use

2 In a training session, a racing cyclist's journey is in three stages.

Stage 1 He accelerates uniformly from rest to 12 m/s in 20 s.

Stage 2 He cycles at 12 m/s for a distance of 4800 m.

Stage 3 He decelerates uniformly to rest.

The whole journey takes 500 s.

(a) Calculate the time taken for stage 2.

time = ... s [2]

(b) On the grid of Fig. 2.1, draw a speed/time graph of the cyclist's ride. [3]

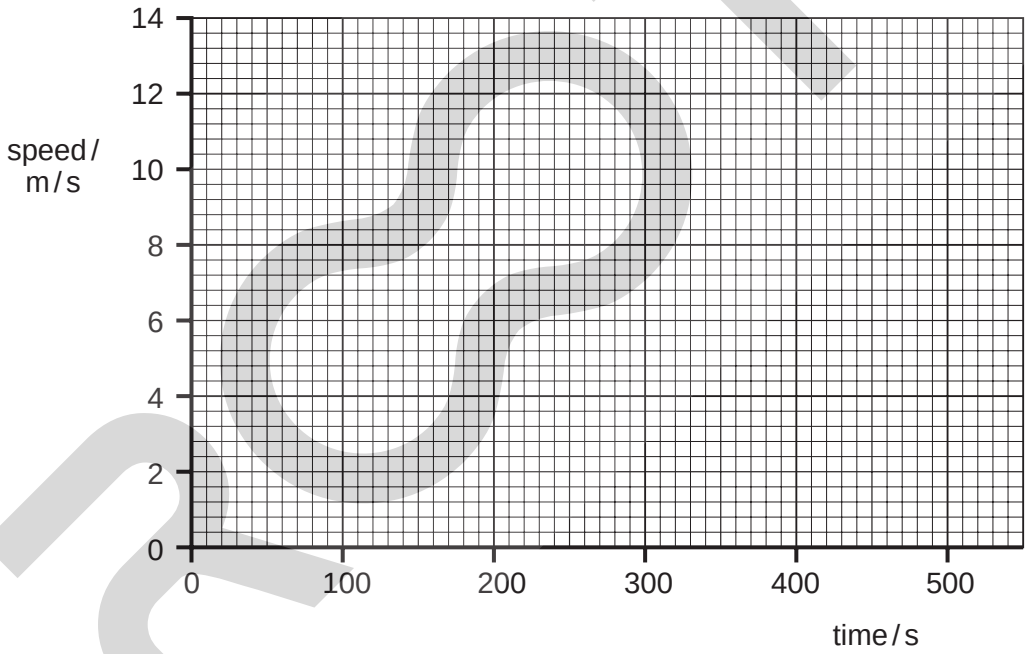

Fig. 2.1

www.roc19.com +91 - 9969 353 391

For Examiner's Use

(c) Show that the total distance travelled by the cyclist is 5400 m.

[4]

(d) Calculate the average speed of the cyclist.

average speed = ... m/s [2]

[Total: 11]

www.root19.com
© UCLES 2012

+91 - 9966399391

For Examiner's Use

3 A piece of stiff cardboard is stuck to a plank of wood by means of two sticky-tape "hinges". This is shown in Fig. 3.1.

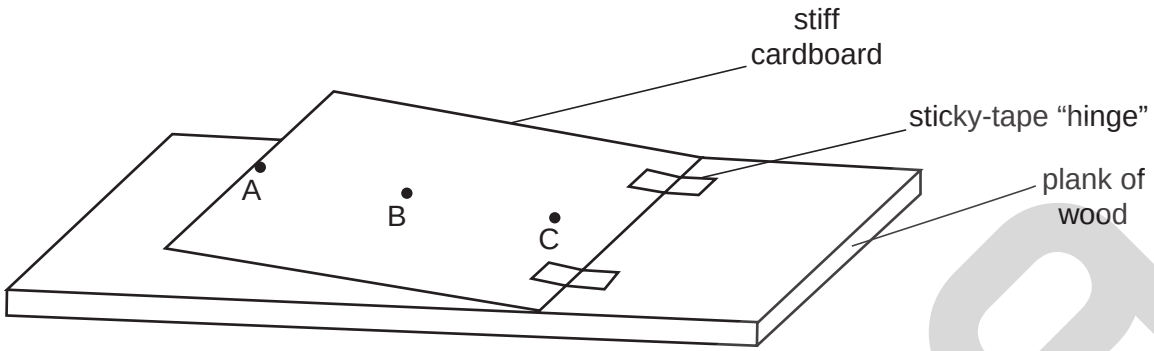

Fig. 3.1

(a) The cardboard is lifted as shown, using a force applied either at A or B or C.

(i) On Fig. 3.1, draw the force in the position where its value will be as small as possible.

[2]

(ii) Explain why the position you have chosen in **(a)(i)** results in the smallest force.

..... [1]

(b) Initially, the cardboard is flat on the plank of wood. A box of matches is placed on it. The cardboard is then slowly raised at the left hand edge, as shown in Fig. 3.2.

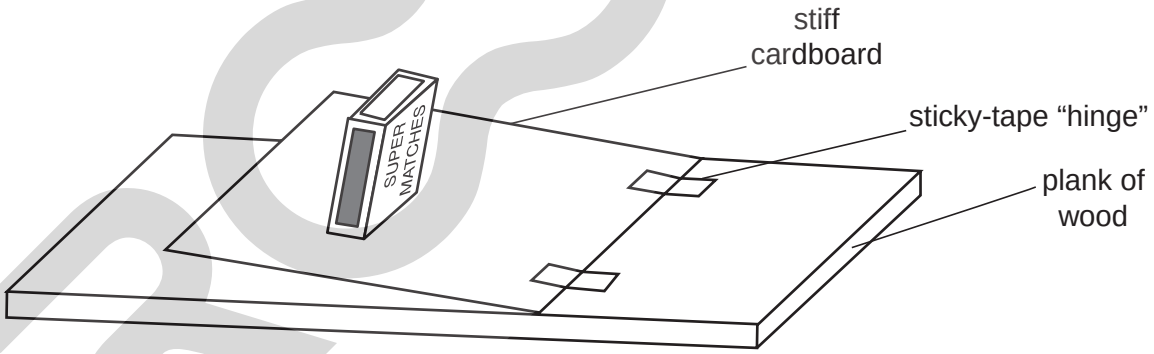

Fig. 3.2

State the condition for the box of matches to fall over.

.....

..... [2]

www.rootto19.com +91 - 9969 353 391

For Examiner's Use

(c) The box of matches is opened, as shown in Fig. 3.3. The procedure in **(b)** is repeated.

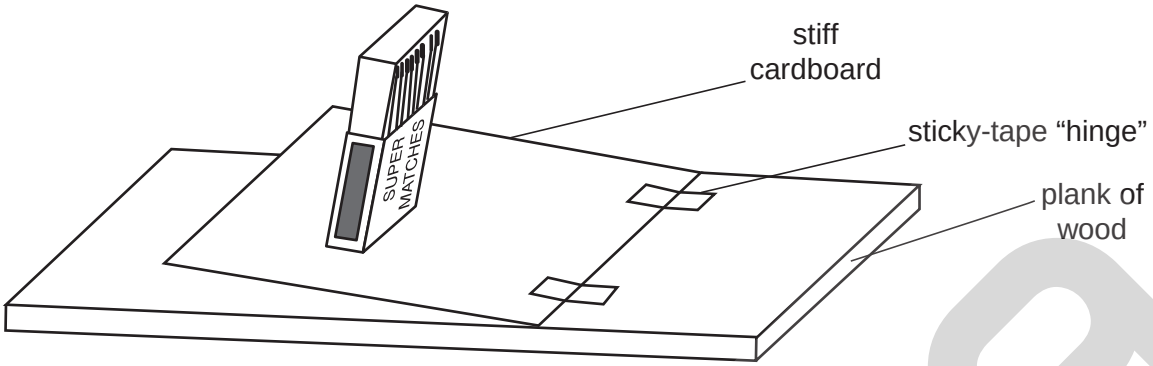

Fig. 3.3

(i) Complete the sentence below, using either the words "greater than" or "the same as" or "less than".

In Fig. 3.3, the angle through which the cardboard can be lifted before

the box of matches falls is …… the angle

before the box of matches falls in Fig. 3.2. [1]

(ii) Give a reason for your answer to **(c)(i)**.

.....

..... [1]

[Total: 7]

www.rooting.com +91 - 9966399391 Tarun Sir

For Examiner's Use

4 In Fig. 4.1, a small bird, a large bird and a squirrel are on the ground under a tree.

Fig. 4.1

A loud noise scares the two birds. They both fly up to the top of the tree.

(a) **(i)** Which bird does the most work raising itself to the top of the tree? ..... [1]

(ii) Explain your answer to **(a)(i)**.

..... [1]

(b) A squirrel has the same weight as the large bird. It climbs the tree, to the same height as the birds.

How does the increase in the squirrel's gravitational potential energy compare with that of each of the two birds? Answer the question by completing the sentences below.

Compared with that of the small bird, the increase of the squirrel's potential energy is ..... .

Compared with that of the large bird, the increase of the squirrel's potential energy is ..... . [2]

(c) Which creature has the least gravitational potential energy when they are at the top of the tree?

..... [1]

(d) The small bird flies back down to the ground.

What happens to the gravitational potential energy it had at the top of the tree?

..... [2]

[Total: 7]

For Examiner's Use

5 **(a)** Here is a list of descriptions of molecules in matter.

description	**solid**	**gas**
free to move around from place to place		
can only vibrate about a fixed position		
closely packed		
relatively far apart		
almost no force between molecules		
strong forces are involved between molecules		

In the columns alongside the descriptions, put ticks next to those which apply to the molecules in

(i) a solid,

(ii) a gas. [4]

(b) The water in a puddle of rainwater is evaporating.

Describe what happens to the molecules when the water evaporates.

.....

..... [2]

[Total: 6]

www.rootig.com +91 - 9966399391 Tom Sir

For Examiner's Use

6 **(a)** Fig. 6.1 shows how the pressure of the gas sealed in a container varies during a period of time.

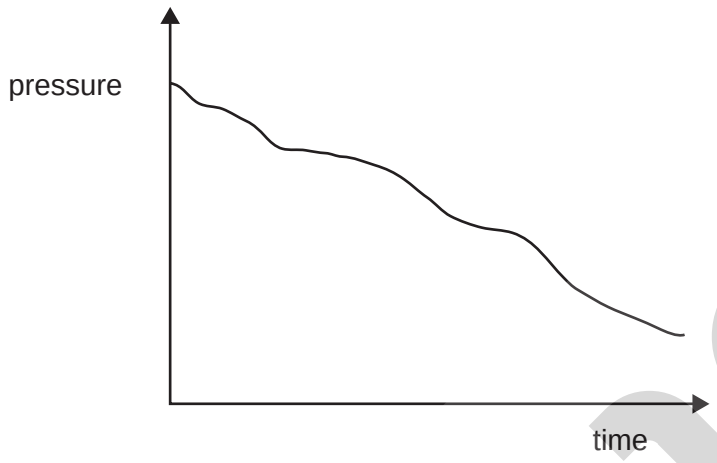

Fig. 6.1

Which of the following statements could explain this variation of pressure?

Tick **two** statements.

The temperature of the gas is increasing. ☐

The temperature of the gas is decreasing. ☐

The volume of the container is increasing. ☐

The volume of the container is decreasing. ☐ [2]

www.roorkee.com

+91 - 9969 353 391

For Examiner's Use

(b) Fig. 6.2 shows some gas trapped in a cylinder with a movable piston.

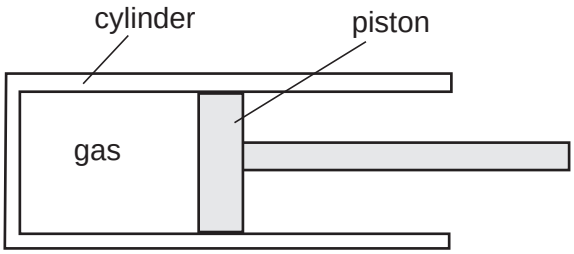

Fig. 6.2

The temperature of the gas is raised.

(i) State what must happen to the piston, if anything, in order to keep the pressure of the gas constant.

..... [1]

(ii) State your reasons for your answer to **(b)(i)**.

.....

..... [1]

[Total: 4]

www.rootng.com +91 - 9966399391 Promoted by

For Examiner's Use

7 An electric soldering iron is used to melt solder, for joining wires in an electric circuit. A soldering iron is shown in Fig. 7.1.

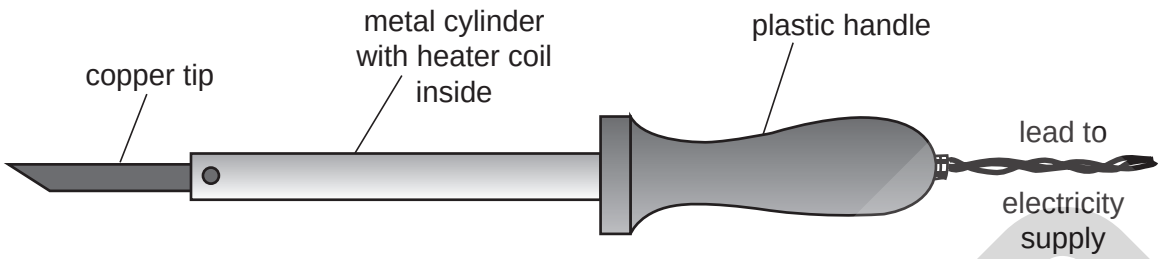

Fig. 7.1

Solder is a metal which melts easily. The heater coil inside the metal cylinder heats the copper tip.

(a) **(i)** Suggest why the tip is made of copper.

..... [1]

(ii) Suggest why the handle is made of plastic.

..... [1]

(b) The heater coil is switched on. When the tip is put in contact with the solder, some of the heat is used to melt the solder.

(i) State the process by which the heat is transferred from the copper tip to the solder.

..... [1]

(ii) By which process or processes is the rest of the heat transferred to the surroundings? Tick the boxes alongside any of the following (you may tick as many as you think are correct).

conduction ☐

convection ☐

evaporation ☐

radiation ☐ [2]

For Examiner's Use

(c) A short time after switching on the soldering iron, it reaches a steady temperature, even though the heater coil is constantly generating heat.

The soldering iron is rated at 40W.

What is the rate at which heat is being lost from the soldering iron? Tick **one** box.

greater than 40W ☐

equal to 40W ☐

less than 40W ☐ [1]

[Total: 6]

www.rootid.com
© UCLES 2007

+91 - 9000330391

For Examiner's Use

8 A square wooden block is made to rotate 3000 times per minute. A springy metal strip presses against the block, as shown in Fig. 8.1. A person nearby observes what is happening.

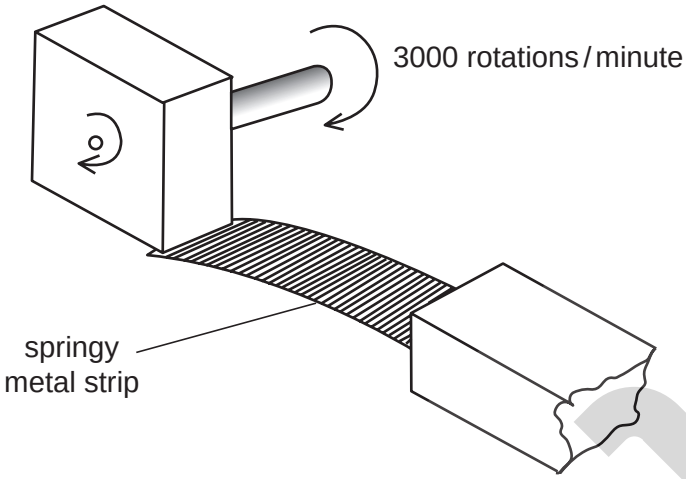

Fig. 8.1

(a) Calculate how many times per second the block rotates.

number of rotations per second = ... [1]

(b) Calculate the frequency of the sound caused by this arrangement.

frequency = ... Hz [2]

(c) State whether or not this sound could be heard by the person nearby, and give a reason for your answer.

.....

..... [1]

[Total: 4]

For Examiner's Use

9 **(a)** Fig. 9.1 shows two resistors connected to a 6 V battery.

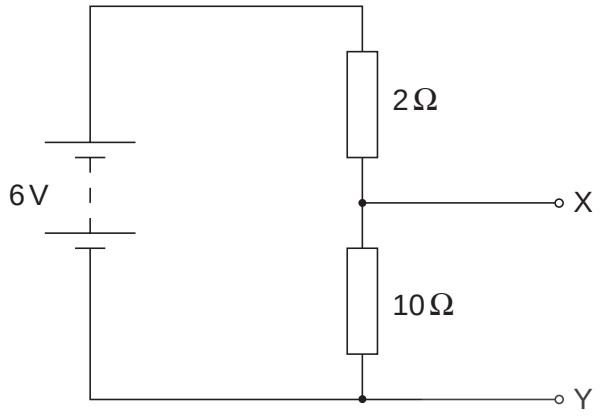

Fig. 9.1

(i) What name do we use to describe this way of connecting resistors?

..... [1]

(ii) Calculate the combined resistance of the two resistors.

combined resistance = ... Ω [1]

(iii) Calculate the current in the circuit.

current = ... [4]

(iv) Use your answer to **(a)(iii)** to calculate the potential difference across the 10 Ω resistor.

potential difference = ... V [2]

(v) State the potential difference between terminals X and Y.

..... V [1]

www.rootlg.com +91 - 9666 339 391 Promoted

For Examiner's Use

(b) The circuit in Fig. 9.2 is similar to the circuit in Fig. 9.1, but it uses a resistor AB with a sliding contact.

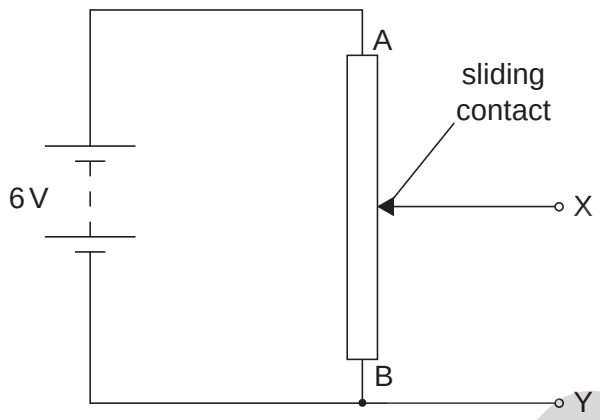

Fig. 9.2

(i) State the potential difference between X and Y when the sliding contact is at

1. end A of the resistor, ... V

2. end B of the resistor. ..... V [2]

(ii) The sliding contact of the resistor AB is moved so that the potential difference between X and Y is 5V.

On Fig. 9.2, mark with the letter C the position of the sliding contact. [1]

[Total: 12]

www.root19.com +91 - 9969 353 391

For Examiner's Use

10 Your teacher gives you a length of wire, a sensitive millivoltmeter and a powerful magnet. You are asked to demonstrate the induction of an e.m.f. in the wire.

(a) Describe what you would do.

.....

.....

.....

.....

..... [2]

(b) How would you know that an e.m.f. has been induced?

..... [1]

(c) Name a device which makes use of electromagnetic induction.

..... [1]

[Total: 4]

ROOT 19

www.root19.com +91 - 9966399391 Tom Sir

For Examiner's Use

11 Fig. 11.1 shows a bar magnet on a board in a region where the magnetic field of the surroundings is so weak it can be ignored. The letters N and S show the positions of the north and south poles of the magnet. Also on the diagram are marked four dots.

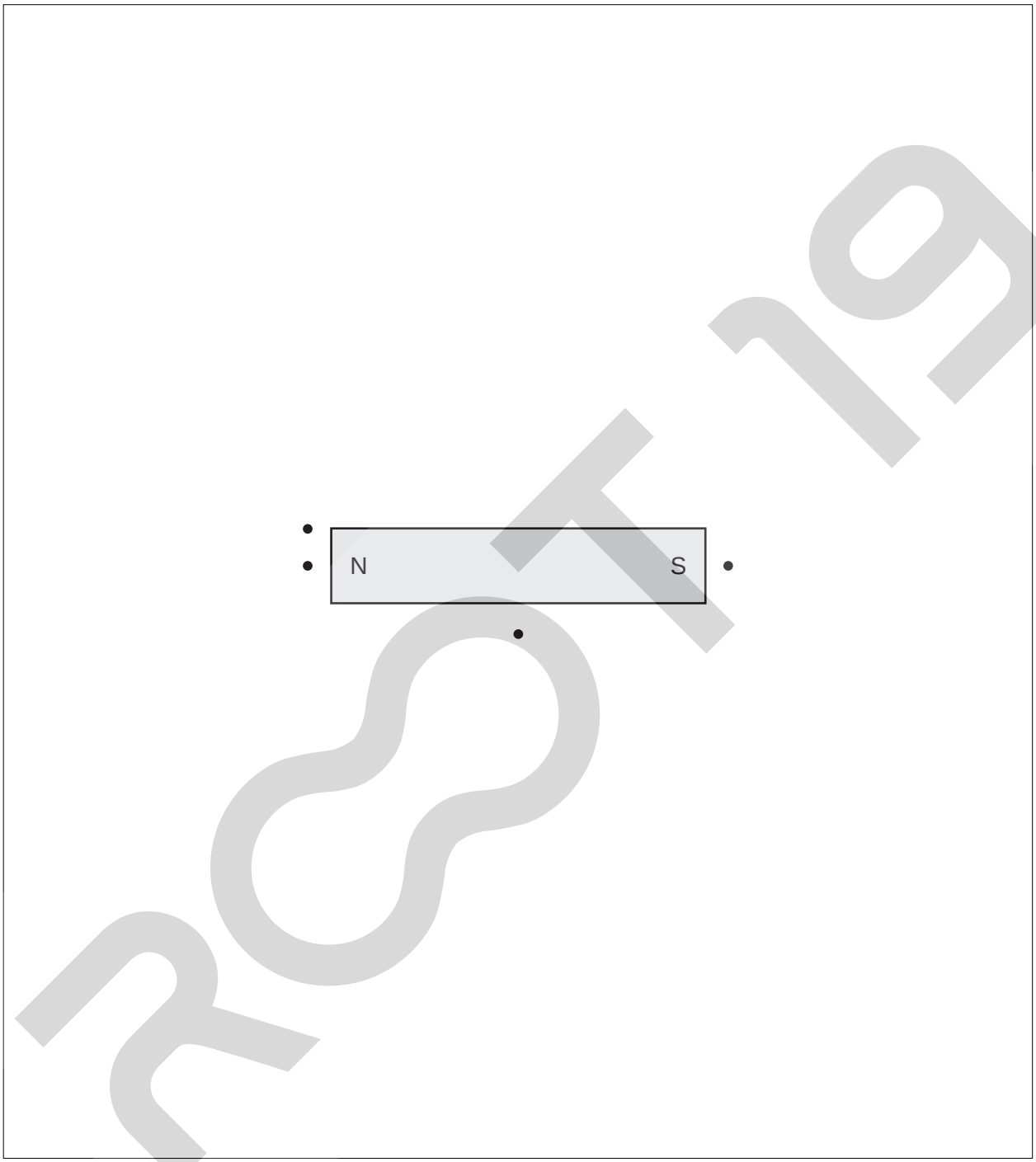

Fig. 11.1

(a) On Fig. 11.1, carefully draw four magnetic field lines, one passing through each of the four dots. The lines you draw should begin and end either on the magnet or at the edge of the board. [5]

(b) On one of your lines, put an arrow to show the direction of the magnetic field. [1]

[Total: 6]

www.root19.com +91 - 9969 353 391

For Examiner's Use

12 Three particles you have learned about are

protons, neutrons and electrons.

(a) How many of each of these particles

(i) are found in an α-particle,

number of protons = ...

number of neutrons = ...

number of electrons = ... [1]

(ii) are found in a β-particle?

number of protons = ...

number of neutrons = ...

number of electrons = ... [1]

(b) Sodium-24 can be represented as $^{24}_{11}Na$.

How many of each of these particles are there in a neutral atom of $^{24}_{11}Na$?

number of protons = ...

number of neutrons = ...

number of electrons = ... [3]

(c) A nucleus of sodium-24 decays to become magnesium-24, by the emission of one particle. The equation below describes this change.

The symbol $^{x}_{y}\theta$ represents the emitted particle.

$$^{24}_{11}Na \rightarrow {}^{24}_{12}Mg + {}^{x}_{y}\theta$$

(i) State the value of x. ..... [1]

(ii) State the value of y. ..... [1]

(iii) What type of particle is θ? ..... [1]

[Total: 8]

www.root19.com © UCLES 2010 0625/02/M/J/07 +91 - 9969 353 391

BLANK PAGE

Permission to reproduce items where third-party owned material protected by copyright is included has been sought and cleared where possible. Every reasonable effort has been made by the publisher (UCLES) to trace copyright holders, but if any items requiring clearance have unwittingly been included, the publisher will be pleased to make amends at the earliest possible opportunity.

University of Cambridge International Examinations is part of the Cambridge Assessment Group. Cambridge Assessment is the brand name of University of Cambridge Local Examinations Syndicate (UCLES), which is itself a department of the University of Cambridge.